Attachment - Thumb Trigger
Accessory: Safety Break

Ski Pass Holder

QTY:

Size:10×900mm

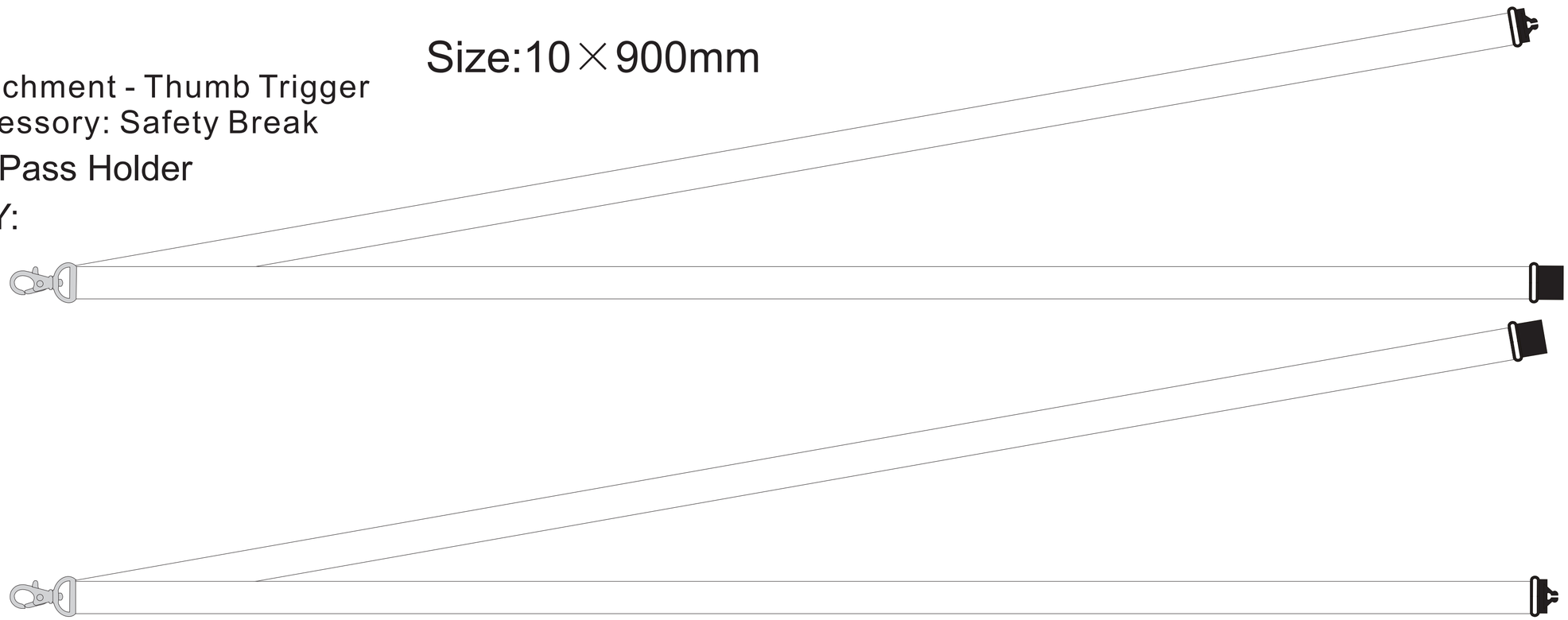

Front

Back

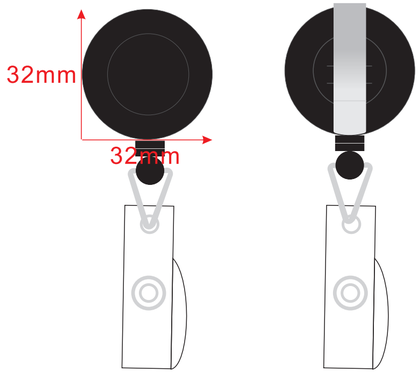

Reduced by 50%

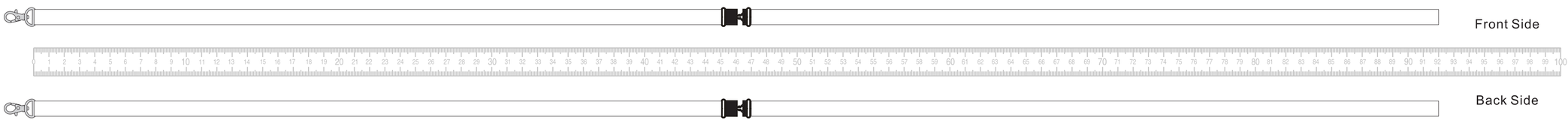

☐ It's close to Pantone

Printed full colour on both back and front of lanyard

by Sublimation Printing

Attachment - Thumb Trigger

Accessory: Safety Break

Ski Pass Holder

QTY:

Size:15×900mm

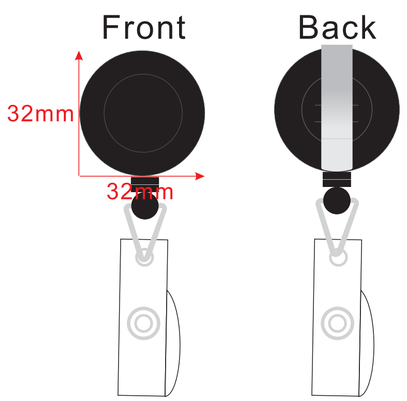

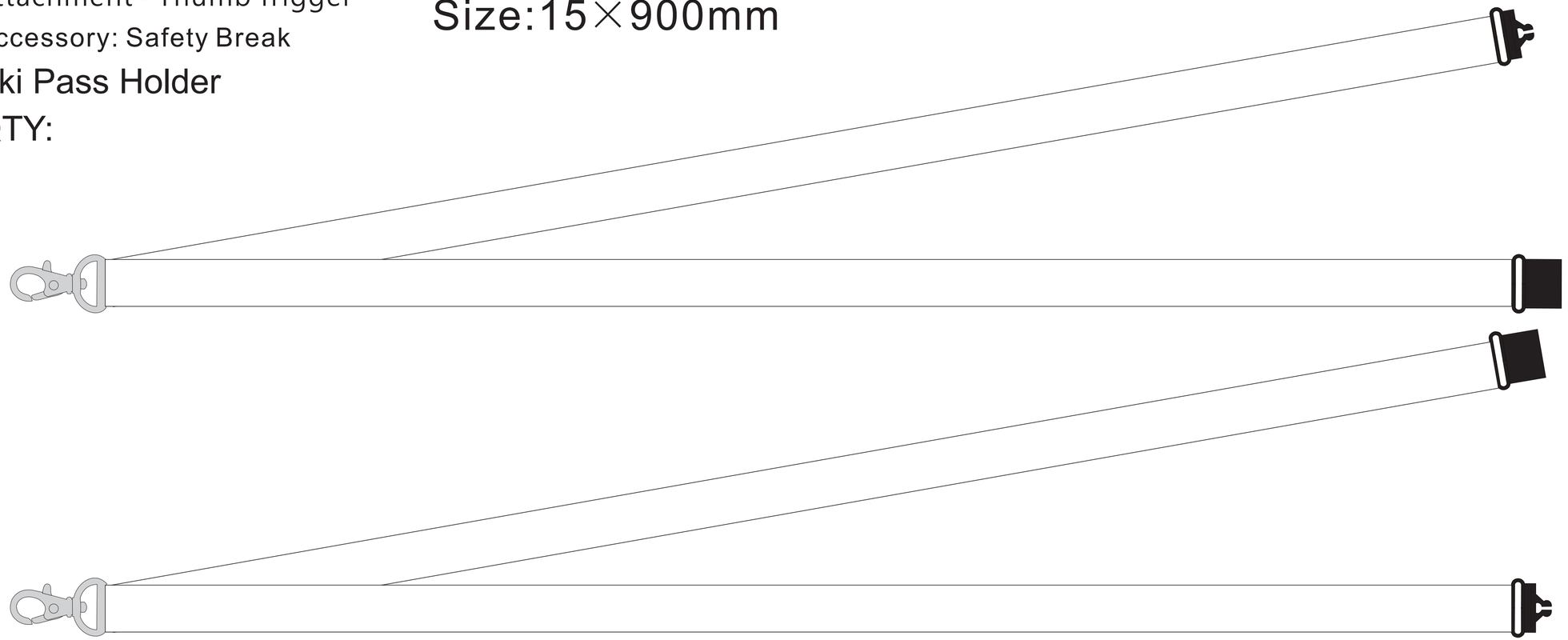

Reduced by 50%

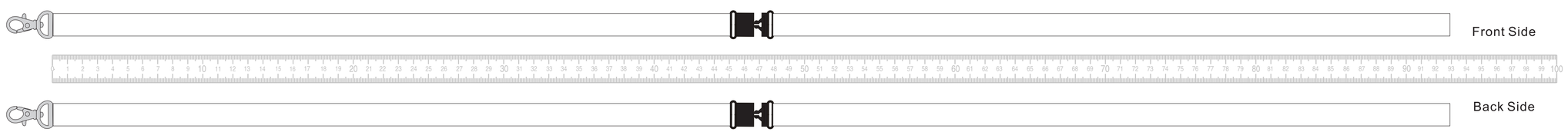

☐ It's close to Pantone

Printed full colour on both back and front of lanyard

by Sublimation Printing

Attachment - Thumb Trigger

Accessory: Safety Break

Ski Pass Holder

QTY:

Size: 20X900mm

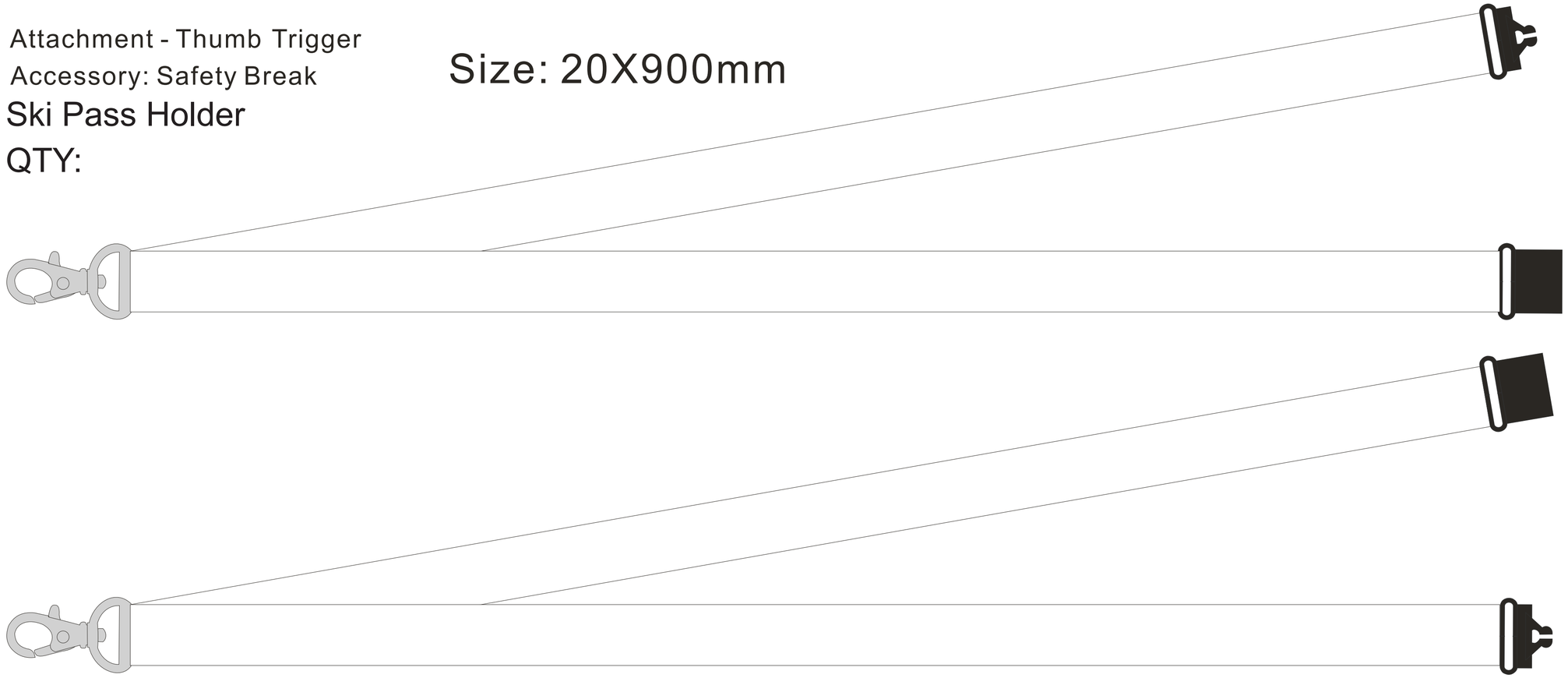

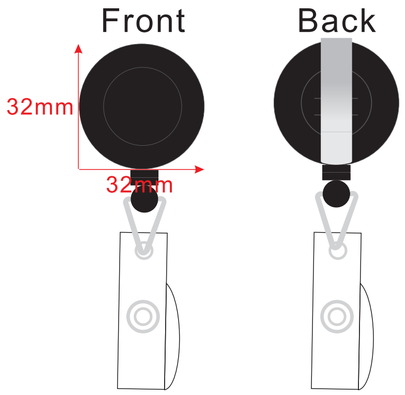

Reduced by 50%

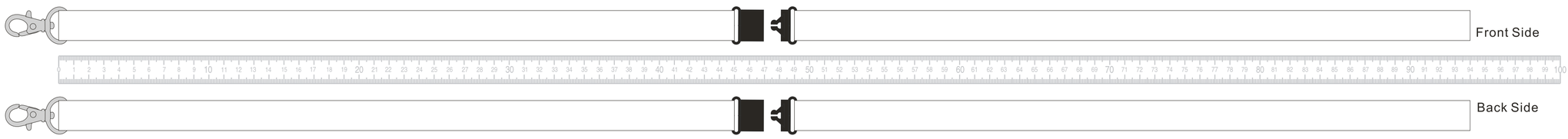

☐ It’s close to Pantone

Printed full colour on both back and front of lanyard

by Sublimation Printing

Attachment - Thumb Trigger
Accessory: Safety Break
Ski Pass Holder
QTY:

Size:25X900mm

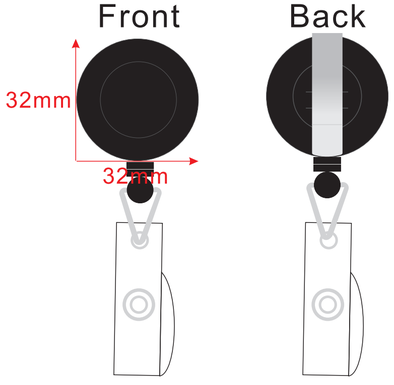



Reduced by 50%

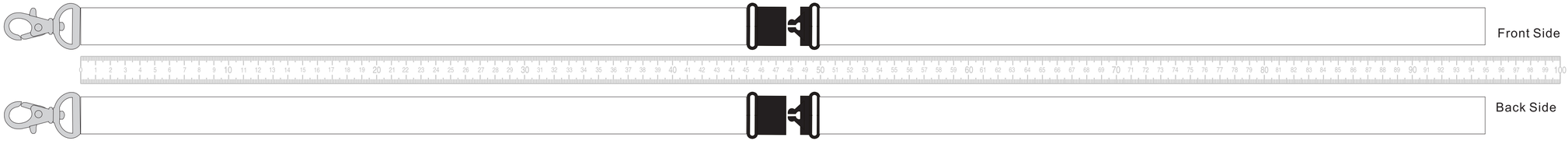

☐ It's close to Pantone

Printed full colour on both back and front of lanyard

by Sublimation Printing