Attachment - Thumb Trigger
Accessory: Safety Break

Size:10×900mm

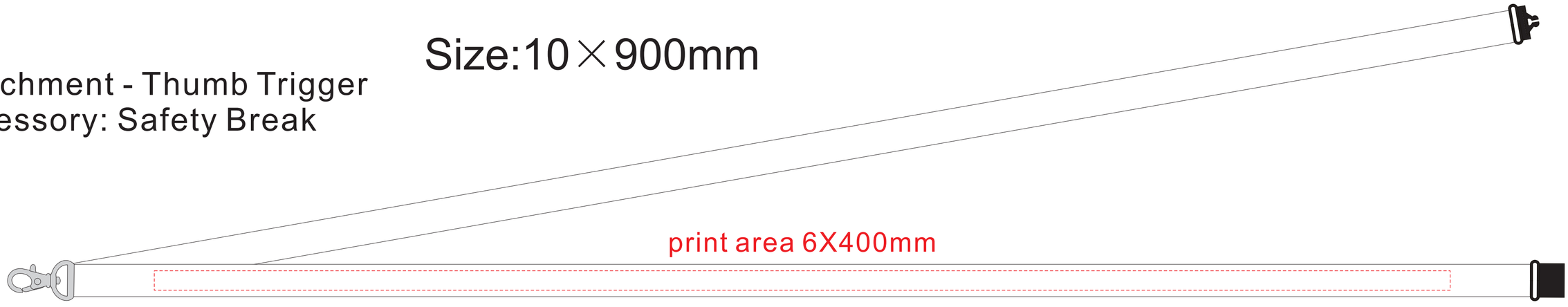

Reduced by 50%

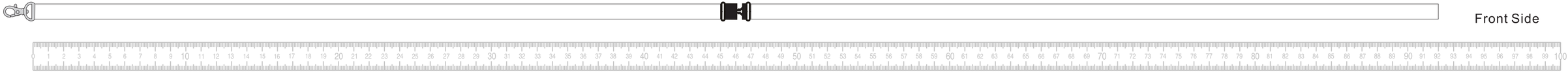

Attachment - Thumb Trigger

Accessory: Safety Break

Size:15×900mm

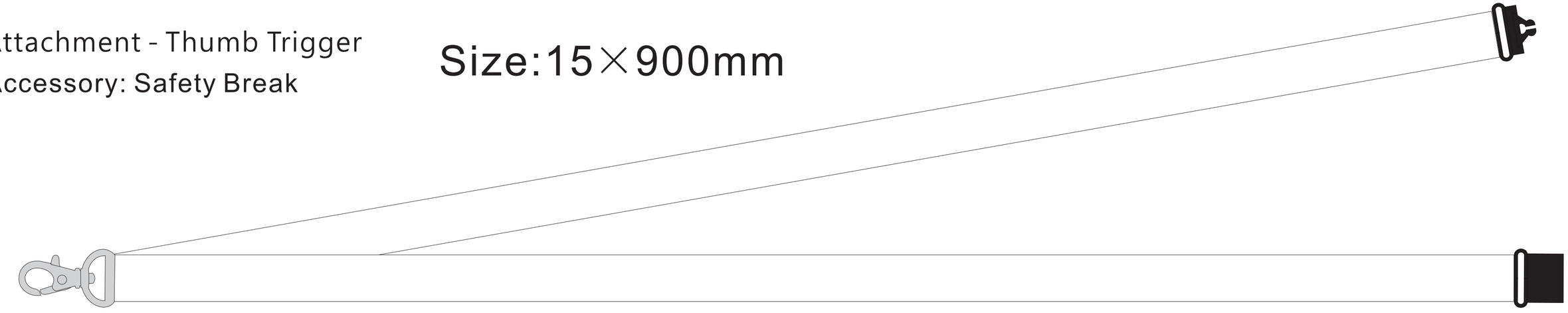

Reduced by 50%

