Attachment: Black Safety Break
Accessory: Lobster Clip
QTY:

Size:20mm(W)X900mm(L)X1.25mm(D)

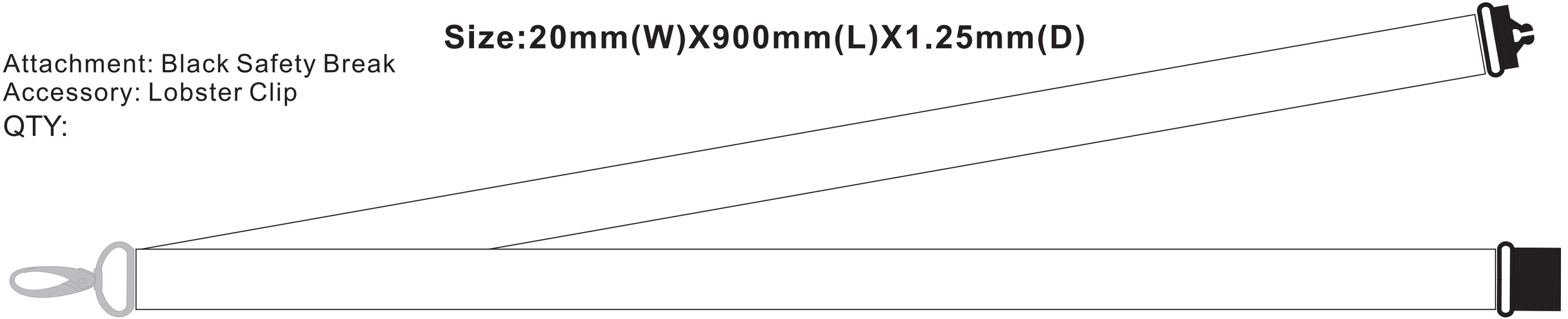

Reduced by 50%

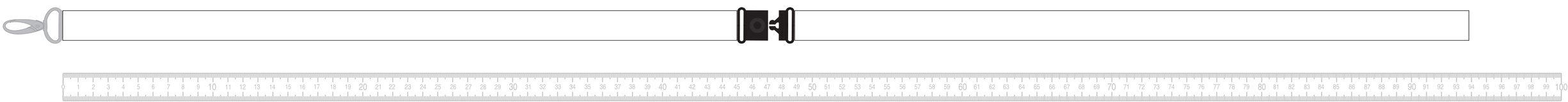

Attachment: Black Safety Break
Accessory: Lobster Clip
QTY:

Size:25mm(W)X900mm(L)X1.25mm(D)

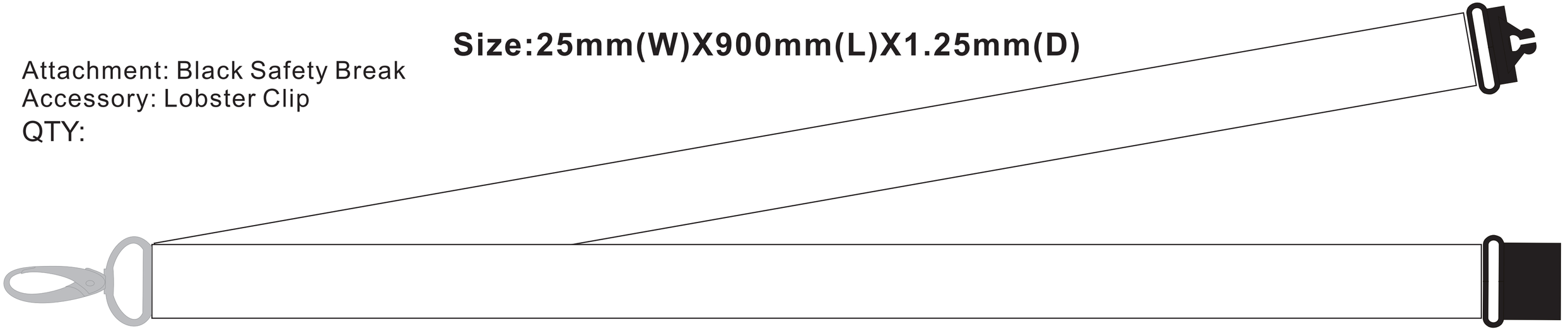

Reduced by 50%

